WASHINGTON STANDARD DRAWING	DRAINAGE INLET PIPE STRUCTURE	STANDARD DRAWING NO. DRN-0056 APPROVED BY: LAJ DRAWN BY: KLY ISSUE DATE: 5/01

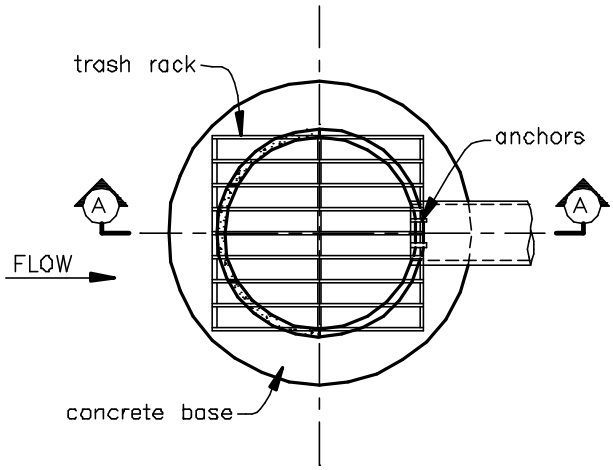

PLAN VIEW

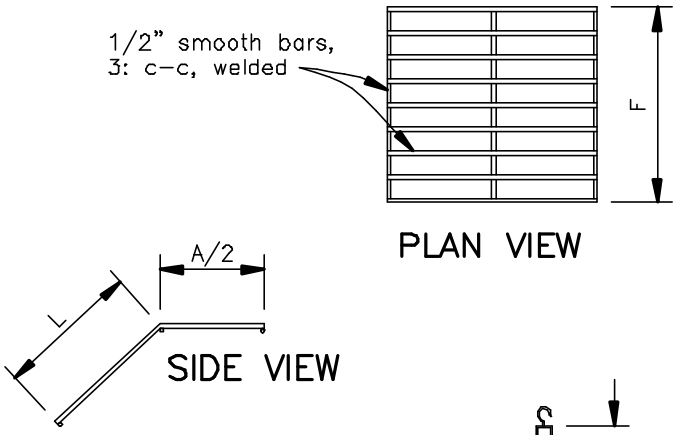

TRASH RACK DETAILS

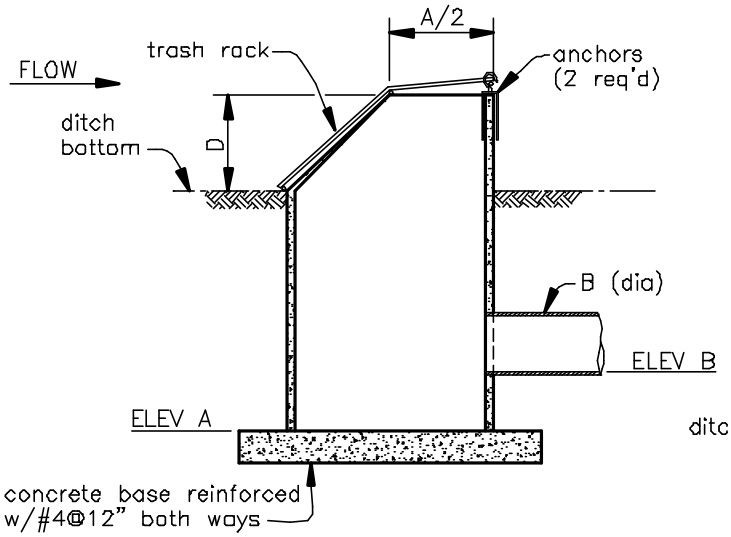

SECTION A

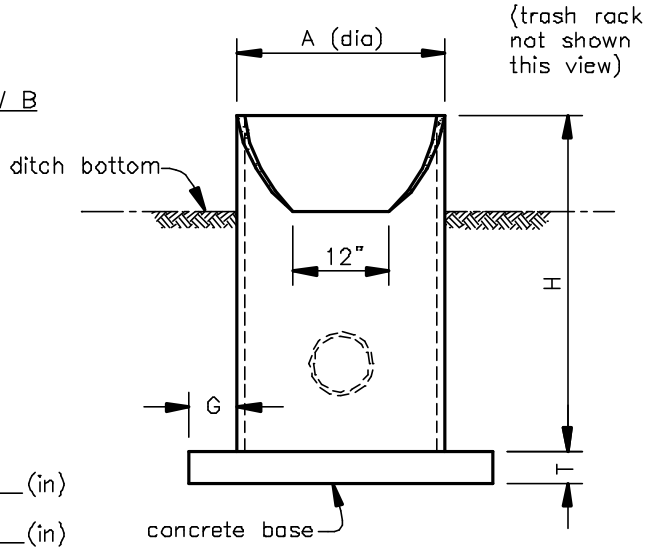

ELEVATION

DIMENSIONS

A (dia) = _____(in)	H = _____(ft) _____(in)
A pipe type_____	F = _____(ft) _____(in)
B (dia) = _____(in)	D = _____(ft) _____(in)
B pipe type_____	G = _____(ft) _____(in)
ELEV A = _____	L = _____(ft) _____(in)
ELEV B = _____	T = _____(in)
	A/2 = _____(in)

NOTE:
This standard drawing requires supporting technical documentation prior to use and must be adapted to the specific site.

Drawing not to scale.

	JOB CLASS	Date
	CAD FILE NO. DRN-0056.DWG	Designed _____ _____
	SHEET OF	Drawn _____ _____
		Checked _____ _____
U.S.D.A. NATURAL RESOURCES CONSERVATION SERVICE		Approved _____ _____