WASHINGTON STANDARD DRAWING	DRAINAGE R/C INLET STRUCTURE	STANDARD DRAWING NO. DRN-0052 APPROVED BY: LAJ DRAWN BY: KLY ISSUE DATE: 5/01

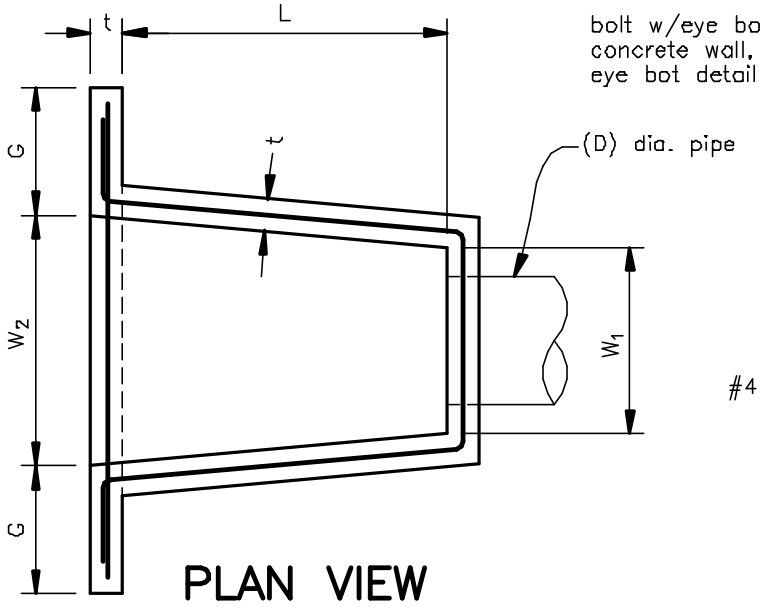

PLAN VIEW

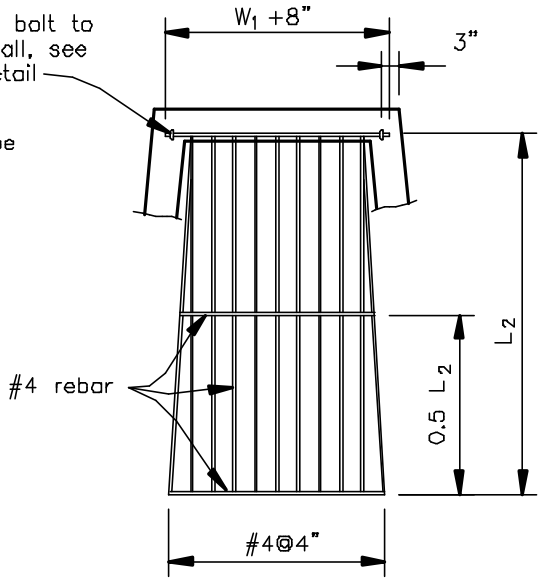

TRASH RACK

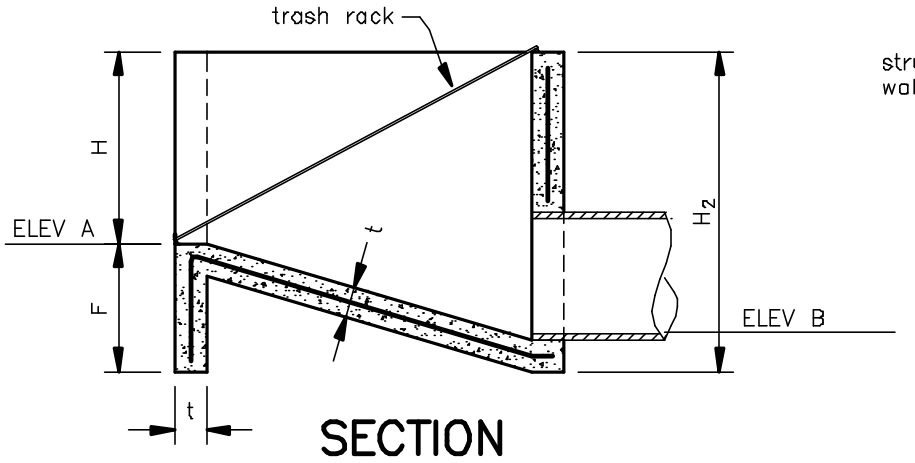

SECTION

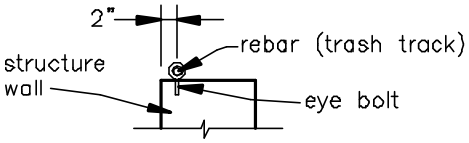

EYE BOLT DETAIL
(ENLARGED SCALE)

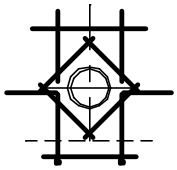

PIPE REBAR DETAIL
(REDUCED SCALE)

STRUCTURE DIMENSIONS

W_1 = _____ (ft) _____ (in)

W_2 = _____ (ft) _____ (in)

L = _____ (ft) _____ (in)

L_2 = _____ (ft) _____ (in)

H = _____ (ft) _____ (in)

H_2 = _____ (ft) _____ (in)

F = _____ (ft) _____ (in)

G = _____ (ft) _____ (in)

t = _____ (in)

D = _____ (in)

ELEV A _____

ELEV B _____

REBAR SIZE _____

SPACING _____ c-c (in)

NOTE:
This standard drawing requires supporting technical documentation prior to use and must be adapted to the specific site.

Drawing not to scale.

	JOB CLASS		Date
	CAD FILE NO. DRN-0052.DWG	Designed	
		Drawn	
	SHEET OF	Checked	
U.S.D.A. NATURAL RESOURCES CONSERVATION SERVICE		Approved	