WASHINGTON STANDARD DRAWING	DRAINAGE R/C INLET STRUCTURE	STANDARD DRAWING NO. DRN–0051 APPROVED BY: LAJ DRAWN BY: KLY ISSUE DATE: 5/01

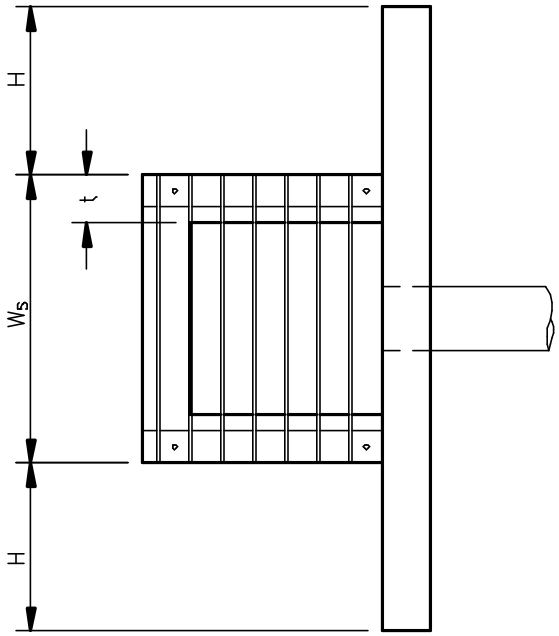

PLAN VIEW

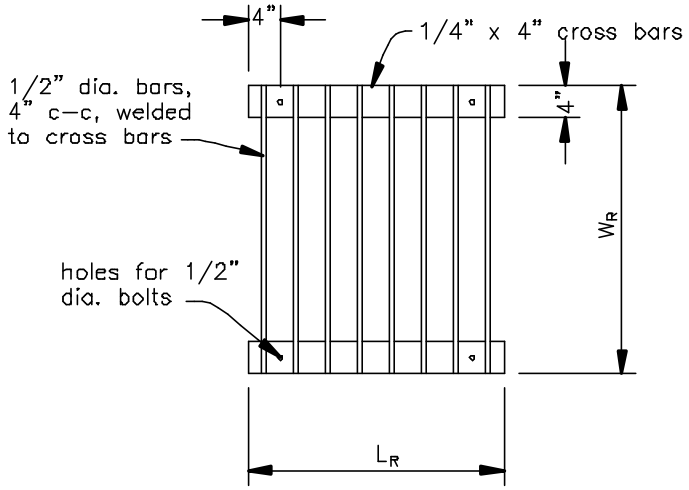

RACK DETAIL

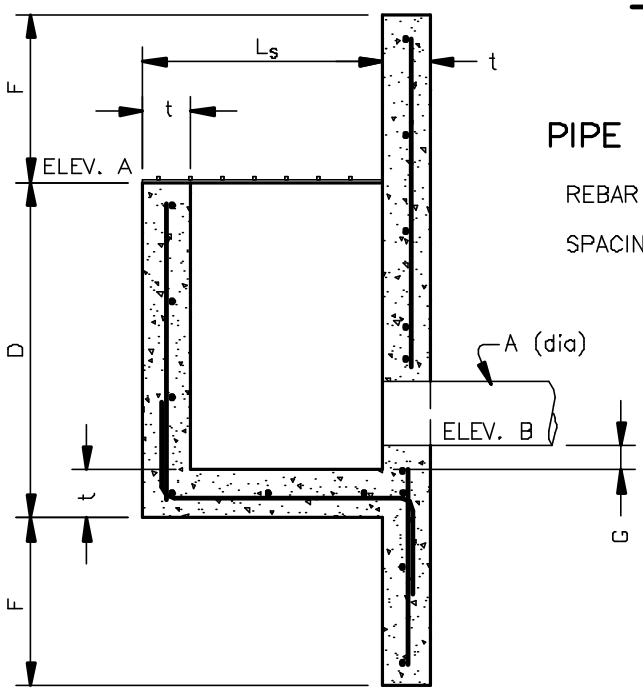

SECTION VIEW

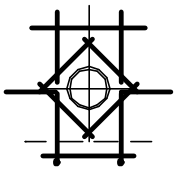

PIPE REBAR DETAIL

REBAR SIZE _____

SPACING _____ c–c (in)

DIMENSIONS

A (dia) _____ (in)

B (dia) _____ (in)

L_S= _____ (ft) _____ (in)

W_S = _____ (ft) _____ (in)

L_R= _____ (ft) _____ (in)

W_R = _____ (ft) _____ (in)

D = _____ (ft) _____ (in)

H = _____ (ft) _____ (in)

F = _____ (ft) _____ (in)

G = _____ (in)

t = _____ (in)

ELEV A _____

ELEV B _____

NOTE:
This standard drawing requires supporting technical documentation prior to use and must be adapted to the specific site.

Drawing not to scale.

	JOB CLASS		Date
	CAD FILE NO. DRN–0051.DWG	Designed	
		Drawn	
	SHEET OF	Checked	
U.S.D.A. NATURAL RESOURCES CONSERVATION SERVICE		Approved	