WASHINGTON STANDARD DRAWING	DRAINAGE **OUTLET PROTECTION**	STANDARD DRAWING NO. **DRN-0010** APPROVED BY: LAJ DRAWN BY: KLY ISSUE DATE: 5/01

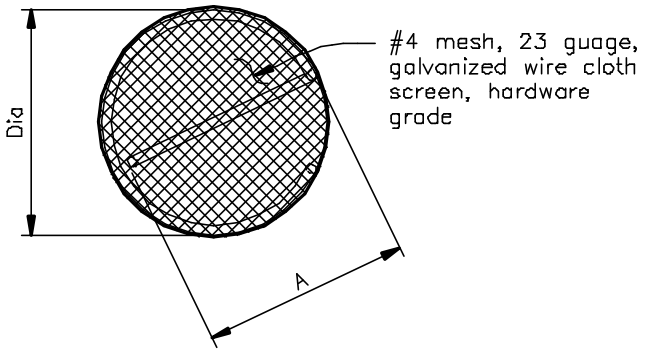

END VIEW

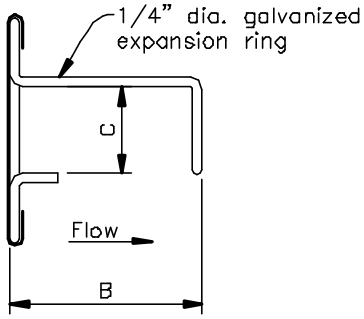

SIDE VIEW

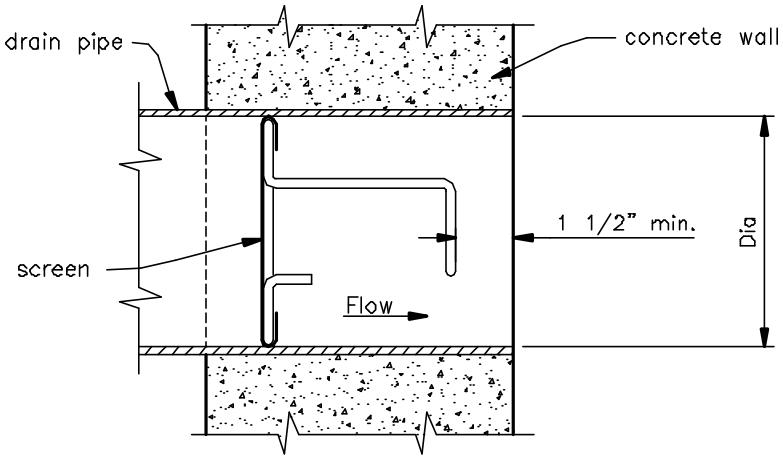

ELEVATION

DIMENSION TABLE

Dia	A	B	C
4"	3 1/2"	5"	2"
6"	5 1/2"	5"	2 1/2"
8"	7 1/2"	5"	3"

This standard drawing requires supporting technical documentation prior to use and must be adapted to the specific site.

Drawing not to scale.

	JOB CLASS	Date
	CAD FILE NO. DRN-0010.DWG	Designed _____ Drawn _____
	SHEET OF	Checked _____
U.S.D.A. NATURAL RESOURCES CONSERVATION SERVICE		Approved _____